FILTER OVERVIEW WITH SERVICE INTERVALS

5M Series – 5065M, 5075M, 5085M, 5095M, 5095MH, 5105M

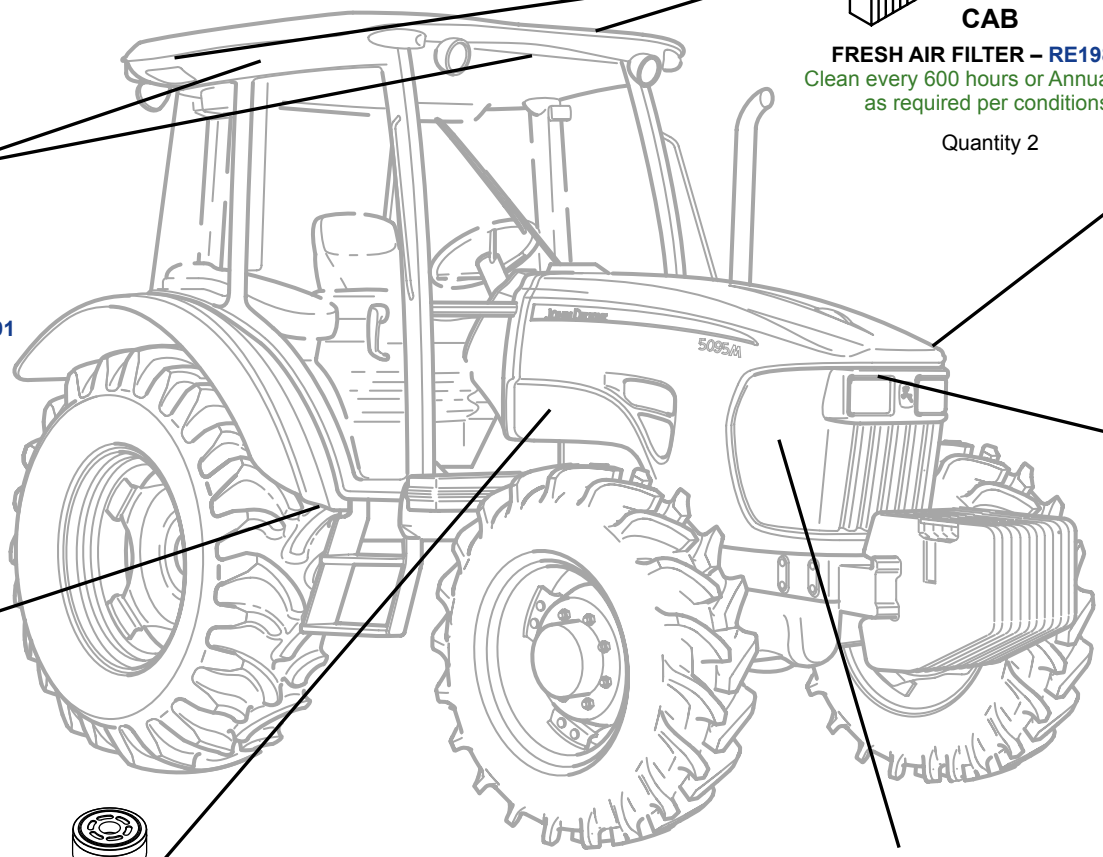

CAB

FRESH AIR FILTER – RE198488
Clean every 600 hours or Annually, and as required per conditions.

Quantity 2

CAB

RECIRCULATION AIR FILTER – RE195491
Clean every 600 hours or Annually, and as required per conditions.

Quantity 2

ENGINE OIL FILTER

OIL FILTER – RE519626 (5030 ENGINE)
Replace every 300 hours

If using Plus 50 15-40, replace every 500 hours

ENGINE AIR

PRIMARY RE253518 (5065M, 5075M)
Service every 600 hours or Annually as required per conditions

PRIMARY AL172780 (5085M, 5095M, 5095MH, 5101M)
Service every 1200 hours or Annually as required per conditions

SECONDARY RE253519 (5065M, 5075M)

SECONDARY AL150288 (5085M, 5095M, 5095MH, 5101M)

HYDRAULIC OIL FILTER

OIL FILTER – RE283231

Replace every 600 hours

FUEL FILTERS

PRE-FILTER – RE529643 (4045 ENGINE ONLY)
FINAL FILTER – RE526557 (4045 ENGINE)
FUEL FILTER – RE533026 (5030 ENGINE)

Replace every 500 hours

ENGINE OIL FILTER

OIL FILTER – RE504836 (4045 ENGINE)
Initial replacement after 100 hours and then replace every 300 hours

If using Plus 50 15-40, replace every 500 hours

JOHN DEERE
Genuine Parts and Service

February 2009. Subject to change without notice.